ULPC-S product information sheet

The Ultra Low Profile Series of fixed, tilt and full motion mounts offers a sleek and slim design without compromising functionality. With an impressively low 1.8" (46mm) mounting profile, the ULPC-S is a small full motion mount perfectly suited for those applications where seamless integration counts most.

Product Benefits

- Arms completely nest for a discreet 1.8" (46mm) mounting profile
- Tilt, pan and swivel for maximum viewing flexibility
- Steel tube construction for maximum strength and durability
- Rack and pinion tilt mechanism for effortless adjustment
- Quick-snap cable channels guide wires
- Built-in screen leveling
- Lift n' Lock™ allows you to easily attach your TV to the mount
- 3-point lateral adjustment (1" increments)
- Safety screw secures TV to mount
- Wall plate covers conceal mounting hardware
- Installation template for simple and accurate mounting
- Includes complete hardware kit

Product Specifications

Fits most: 13–32" TVs
Supports up to: 50 lbs (22.7 kg)
Tilt: +15° to -5°
Mounting profile: 1.8" (46mm)
Maximum extension: 16.2" (410mm)
VESA compliant: 100wx100h and 200wx100h
Mounting: Single-stud
UL Listed: Yes
Warranty: 5 years
Color: Black

With OmniMount's low profile full motion mounts, you get everything you want in one mount – the functionality and versatility of a full motion mount in a compact and discreet design.

800.MOUNT.IT (800.668.6848)

Series

FULL MOTION MOUNTS

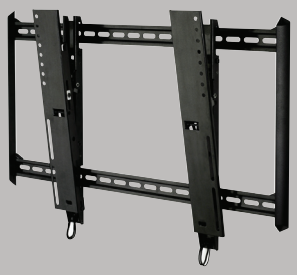

TILT MOUNTS

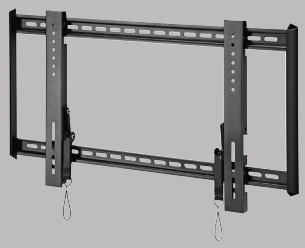

FIXED MOUNTS

ULPC-S technical data sheet

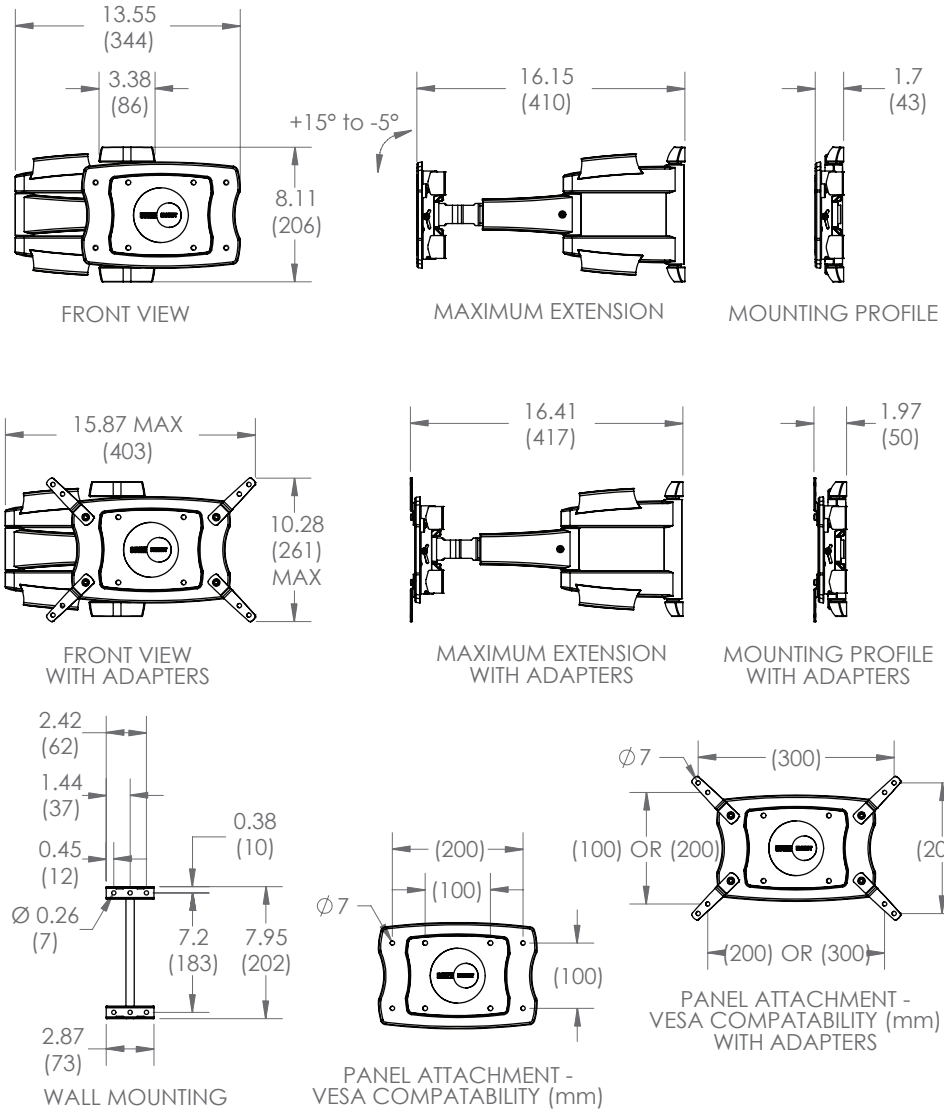

inches (mm)

	Packaging UPC	MC UPC
Americas	728901023736	728901717185
International	728901023736	728901717185

	Dimensions WxDxH Inches (mm)	Wt lbs (kg)	Qty
Box	12.4 x 15 x 3.5 (315x380x90)	7 (3.2)	NA
MC	15.8 x 25.8 x 7.5 (400x655x190)	29.1 (13.2)	4

Box Contents	Qty
Monitor plate	1
Full motion arm	1
Wall rail	2
Wall rail cover	2
Cable channel	2

Box Contents	Qty
Complete mount installation hardware kit	1
Complete panel attachment hardware kit	1
Installation template	1
Instruction manual	1